- **Operating Free-Air Temperature Range −40°C to 150°C**
- **Wide Range of Supply Voltages: Single Supply or Dual Supply . . . 4 V to 30 V**
- **Low Supply Current Drain Independent of Supply Voltage . . . 0.7 mA Typ**
- **Internal Frequency Compensation**
- **Low Input Bias and Offset Parameters**
  - **Input Offset Voltage . . . 3 mV Typ**
  - **Input Offset Current . . . 2 nA Typ**
  - **Input Bias Current . . . 15 nA Typ**
- **Differential Input Voltage Range Equal to Maximum-Rated Supply Voltage . . . 30 V**
- **Open-Loop Differential Voltage Amplification . . . 100 V/mV Typ**

TL2828Z . . . D OR P PACKAGE
(TOP VIEW)

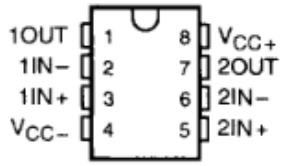

description

The TL2828Z and TL2828Y devices consist of two independent high-gain frequency-compensated operational amplifiers that are designed specifically to operate over a wide range of voltages from a single supply. Operation from split supplies is also possible as long as the difference between the two supplies is 4 V to 30 V, and V_{CC} is at least 1.5 V more positive than the common-mode input voltage. The low supply current drain is independent of the magnitude of the supply voltage.

Applications include transducer amplifiers, dc amplification blocks, and all the conventional operational amplifier circuits that now can be implemented more easily in single-supply voltage systems. For example, the TL2828Z can be operated on automotive engine blocks directly off the standard 12-V supply with minimal electrical protection.

The TL2828Z is characterized for operation over the extended temperature range of −40°C to 150°C.

symbol (each amplifier)

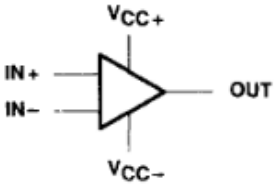

AVAILABLE OPTIONS

T_A	$V_{IO}max$ at 25°C	PACKAGED DEVICES		CHIP FORM (Y)
		SMALL OUTLINE (D)	PLASTIC DIP (P)	
−40°C to 150°C	7 mV	TL2828ZD	TL2828ZP	TL2828Y

The D packages are available taped and reeled. Add R suffix to device type (i.e., TL2828ZDR).
The chip form is tested at T_A = 25°C.

equivalent schematic (each amplifier)

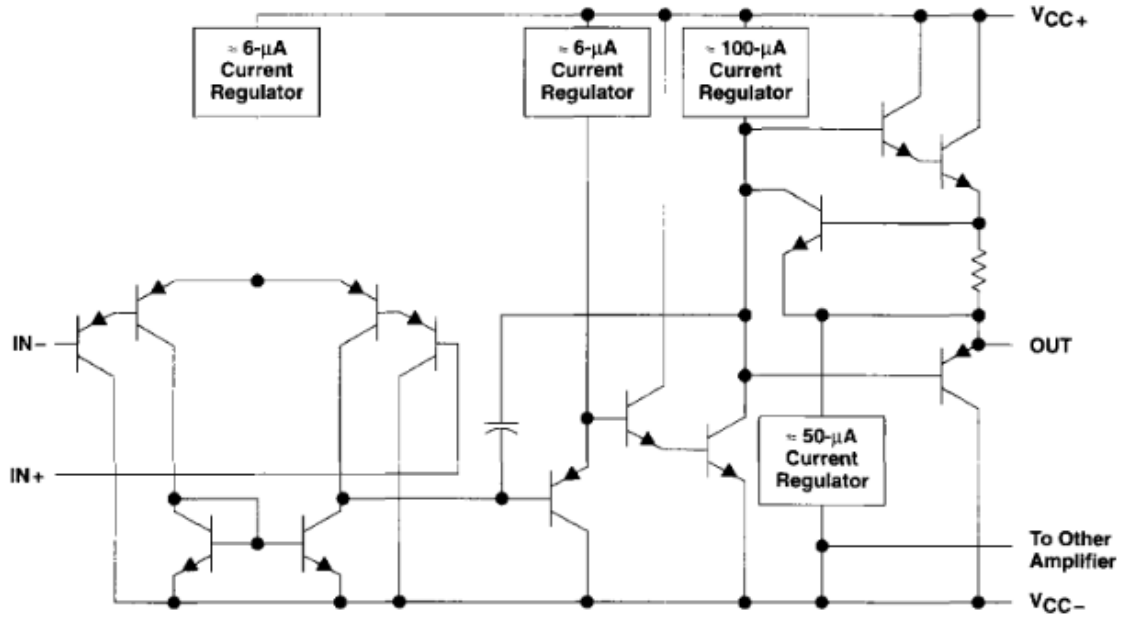

TL2828Y chip information

This chip, when properly assembled, displays characteristics similar to the TL2828Z. Thermal compression bonding may be used on the gold bonding pads. Chips may be mounted with conductive epoxy or a gold-silicon preform.

BONDING PAD ASSIGNMENTS

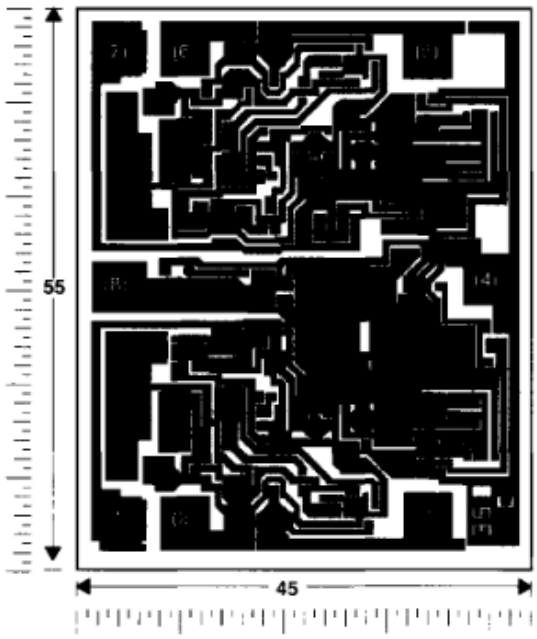

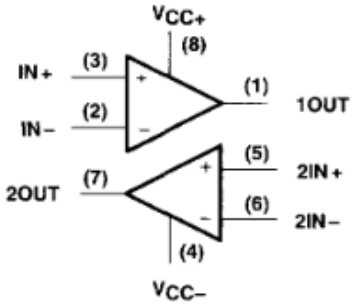

CHIP THICKNESS: 15 TYPICAL

BONDING PADS: 4 × 4 MINIMUM

$T_J$max = 150°C

TOLERANCES ARE ±10%.

ALL DIMENSIONS ARE IN MILS.

PIN (4) IS INTERNALLY CONNECTED TO BACKSIDE OF CHIP.

absolute maximum ratings over operating free-air temperature range (unless otherwise noted)†

Supply voltage, V_{CC+} (see Note 1)	16 V
Supply voltage, V_{CC-}	−16 V
Differential input voltage, V_{ID} (see Note 2)	±32 V
Input voltage range, V_I (any input)	−16 V to 16 V
Input current, I_I (each input)	±1 mA
Output current, I_O	±40 mA
Total current into V_{CC+}	60 mA
Total current out of V_{CC-}	60 mA
Duration of short-circuit at (or below) 25°C (see Note 3)	unlimited
Continuous total dissipation	See Dissipation Rating Table
Operating free-air temperature range, T_A	−40°C to 150°C
Storage temperature range	−65°C to 165°C
Lead temperature 1,6 mm (1/16 inch) from case for 10 seconds	260°C

† Stresses beyond those listed under "absolute maximum ratings" may cause permanent damage to the device. These are stress ratings only, and functional operation of the device at these or any other conditions beyond those indicated under "recommended operating conditions" is not implied. Exposure to absolute-maximum-rated conditions for extended periods may affect device reliability.

NOTES:
1. All voltage values, except differential voltages, are with respect to the midpoint between V_{CC+} and V_{CC-} when dual supplies are specified (e.g., $V_{CC\pm} = \pm 15$ V) and with respect to V_{CC-} when a single supply is specified (e.g., $V_{CC} = 5$ V).
2. Differential voltages are at the noninverting input with respect to the noninverting input. Excessive current will flow if the input is below V_{CC-}.
3. The output may be shorted to either supply. Temperature and/or supply voltages must be limited to ensure that the maximum dissipation rating is not exceeded.

DISSIPATION RATING TABLE

PACKAGE	$T_A \le 25°C$ POWER RATING	DERATING FACTOR ABOVE $T_A = 25°C$	$T_A = 70°C$ POWER RATING	$T_A = 105°C$ POWER RATING	$T_A = 125°C$ POWER RATING	$T_A = 150°C$ POWER RATING
D	812 mV	5.8 mW/°C	551 mW	348 mW	232 mW	87 mW
P	1120 mV	8.0 mW/°C	760 mW	480 mW	320 mW	120 mW

recommended operating conditions

		MIN	MAX	UNIT
Supply voltage, $V_{CC\pm}$		±2	±15	V
Common-mode input voltage, V_{IC}	$V_{CC\pm} = \pm 2.5$ V	−2.5	0.5	V
	$V_{CC\pm} = \pm 15$ V	−15	13	
Input voltage range, V_I	$V_{CC\pm} = \pm 2.5$ V	−2.5	0.5	V
	$V_{CC\pm} = \pm 15$ V	−15	13	
Operating free-air temperature, T_A		−40	150	°C

electrical characteristics at specified free-air temperature, V_{CC} = 5 V (unless otherwise noted)

PARAMETER		TEST CONDITIONS		T_A†	TL2828Z MIN	TL2828Z TYP	TL2828Z MAX	UNIT
V_{IO}	Input offset voltage	V_{IC} = 0, R_S = 50 Ω	V_O = 1.4 V,	25°C		3	7	mV
				Full range			10	
α_{VIO}	Temperature coefficient of input offset voltage			Full range		15		μV/°C
I_{IO}	Input offset current			25°C		2	30	nA
				Full range			200	
I_{IB}	Input bias current			25°C		−15	−100	nA
				Full range			−500	
V_{ICR}	Common-mode input voltage range	R_S = 50 Ω		25°C	0 to 3.5	0 to 3.5		V
				Full range	0 to 3			
V_{OH}	High-level output voltage	I_{OH} = 0.1 mA		25°C	3.3	3.7		V
				Full range	3.2			
		I_{OH} = 1 mA		25°C	3.3	3.6		
				Full range	3.2			
V_{OL}	Low-level output voltage	I_{OL} = 0.1 mA		25°C	0.8	0.6		V
				Full range	1			
		I_{OL} = 1 mA		25°C	0.9	0.7		
				Full range	1.1			
A_{VD}	Large-signal differential voltage amplification	V_O = 1 V to 3.5 V,	R_L = 2 kΩ	25°C	25	100		V/mV
				Full range	0.7			
CMRR	Common-mode rejection ratio	V_{IC} = V_{ICR}min, R_S = 50 Ω	V_O = 1.4 V,	25°C	65	80		dB
				Full range	45			
k_{SVR}	Supply-voltage rejection ratio	V_{CC} = 5 V to 30 V, R_L = 10 kΩ	V_O = 1.4 V,	25°C	65	100		dB
				Full range	65			
I_{CC}	Supply current (total package)	V_{IC} = 0, No load	V_O = 2.5 V,	25°C		0.7	1.2	mA
				Full range			1.2	
ΔI_{CC}	Supply current change over operating temperature range			Full range		140		μA

† Full range is −40°C to 150°C.